Exploring Your System's Architecture

Instructions:
Use this template to create your own Functional Flow Block Diagram to show the visual flow of your system's operations and functions.

To help you navigate through this PowerPoint:

- Slide 2 – FFBD Template Resources. Review all FFBD diagram components. Copy and paste from this slide to add components to your own FFBD.
- Slide 3 – FFBD Format Template. You may find it helpful to use this as a starting point, deleting elements, adding elements, and expanding the box as needed. Do not attempt to make your FFBD fit exactly in this template as-is.

FFBD / EFFBD Template - Resources

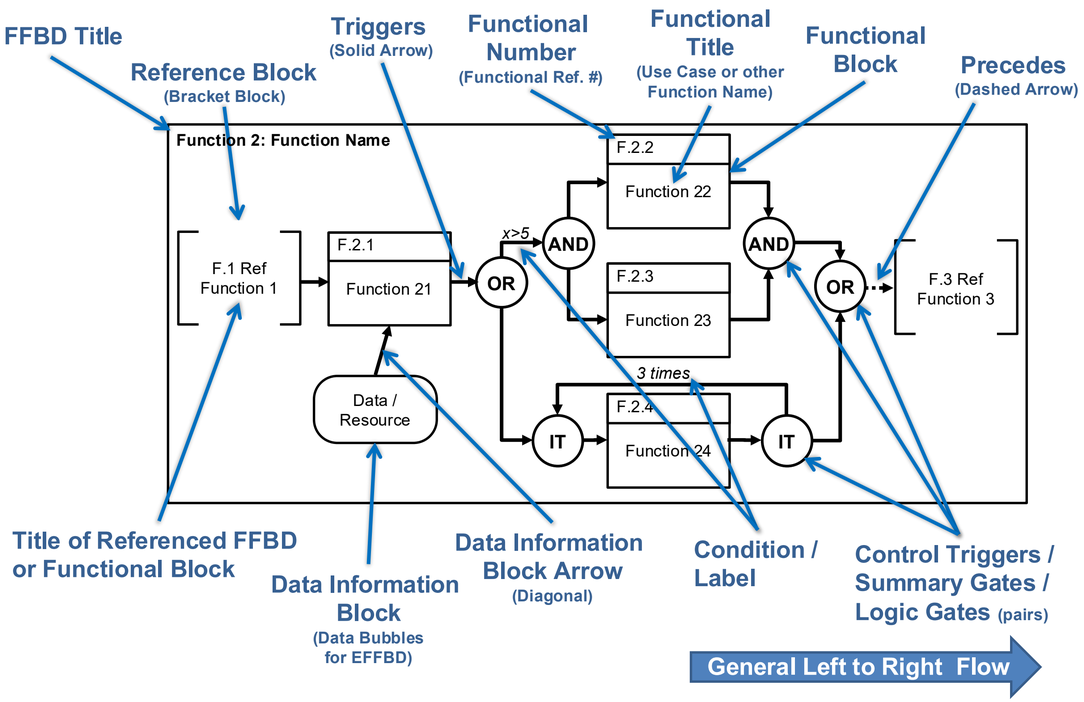

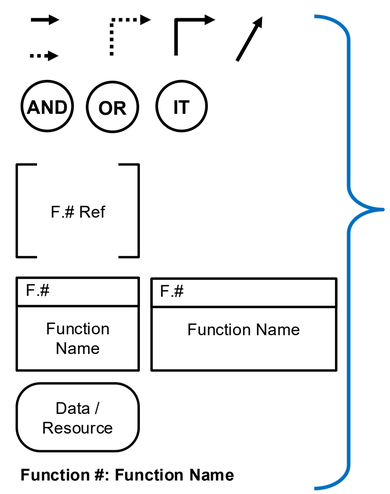

FFBD / EFFBD Template – Example Components for you to Re-use

FFBD / EFFBD Template – Starter Format

Note: Do not attempt to fit your FFBD into this starter format without modifying the number and arrangement of diagram components. This is provided as a clean starting point with at least one example of each type of element. You can copy and paste elements from this starter format one element at a time as you need it, or copy the entire template and begin by eliminating elements you don't need.

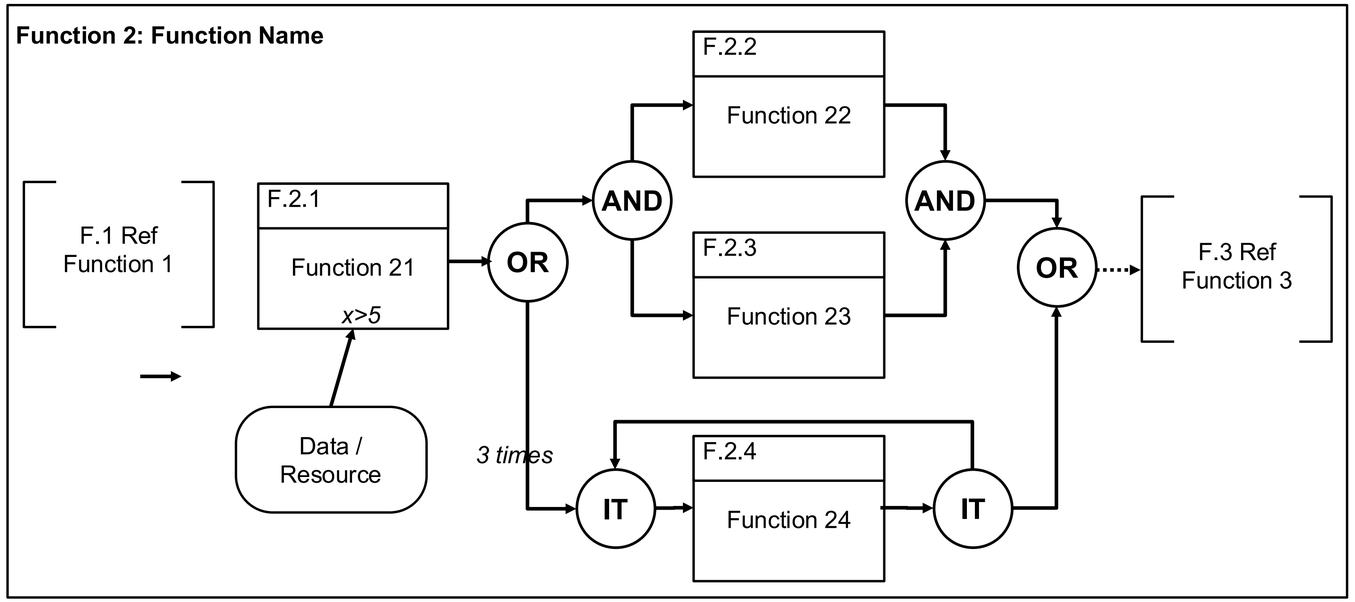

© 2018 eCornell. All rights reserved. All other copyrights, trademarks, trade names, and logos are the sole property of their respective owners.